SPECIFICATION

1. SCOPE

This specification is applied to the piezo-element.

2. SPECIFICATION (at25℃)

2.1 Resonant Frequency	:	2.9±0.3	KHz
2.2 Resonant Resistance	:	300	Ω max
2.3 Capacitance	:	30000	pF±30% at 100Hz
2.4 Input Voltage	:	30	Vp-p max
2.5 Operating Temperature	:	-20～+50	℃
2.6 Storage Temperature	:	-20～+60	℃

3. DIMENSION as per figure

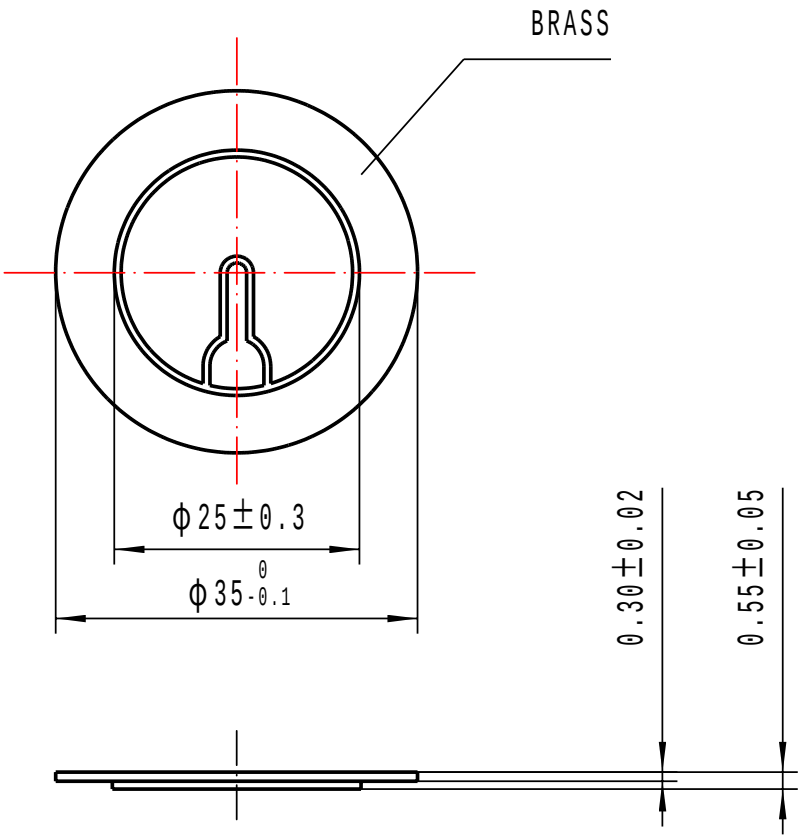

TOLERANCES UNLESS NOTED OTHERWISE
.X ±
.XX ±
.XXX ±
90° FORMED ANGLES +2° -1°

FIRST ANGLE PROJECTION

	SIGN	DATE
DRAWN		02.08.19
DESIGN		
CHECK		
APPROVED		

CONTRACT NO.

AGENCY APPROVAL

KEPO MODEL NO.: M25FT-35T-2.9B1

DWG NO.: KP3.842.834

CUSTOMER

CUSTOMER NO.

REV	1.0	SHEET	
UNIT:		SCALE	

KEPO CO. LTD.
TEL:(+86)574-88370330
FAX:(+86)574-88370329