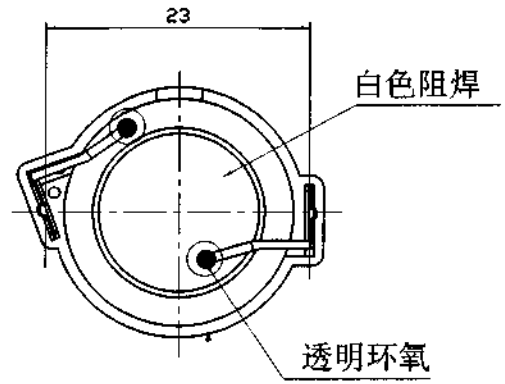

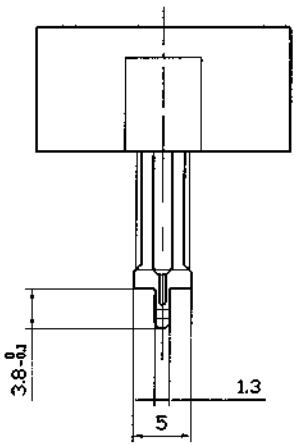

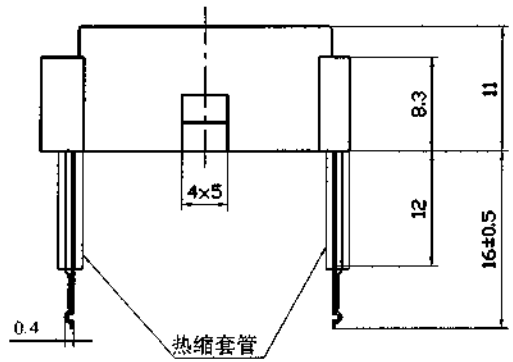

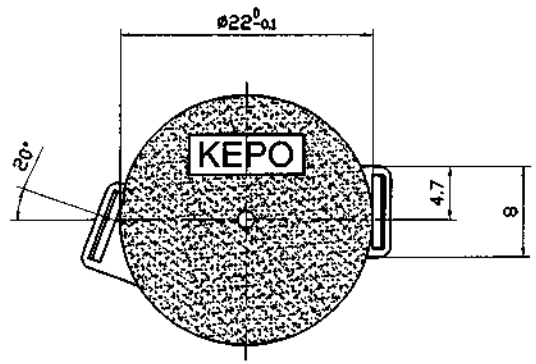

SPECIFICATION

1.Rated Voltage.....5Vp-p Square Wave
2.Max. Input Voltage.....30Vp-p Square Wave
3.Min. Sound Pressure Level.....70dB at /2.0KHz/5Vp-p Square Wave/10cm
4.Capacitance at100Hz ..... 30000 ±30%pF
5.Resonant Frequency.....2.0±0.5KHz
6.Shell Material/Color.....PA/BLACK
7.Operating Temperature.....-20~+70℃
8.Store Temperature.....-30~+80℃
9.Weight..... 3g

No.	DESCRIPTION	APPROVED	DATE

TOLERANCES UNLESS NOTED OTHERWISE
.X ±
.XX ±
.XXX ±
90° FORMED ±2°
ANGLES ±1°

FIRST ANGLE PROJECTION

APPROVALS		DATE
DRAWN		
CHECKED		
APPROVED		05.12.21

KEPO NINGBO KEPO ELECTRONIC CO.,LTD
http://www.chinaacoustic.com

Piezo Transducer 海尔
KPT-2223P12

UNIT mm | DWG NO OEM1217
SCALE NOT TO SCALE | SHEET | VER 1.1