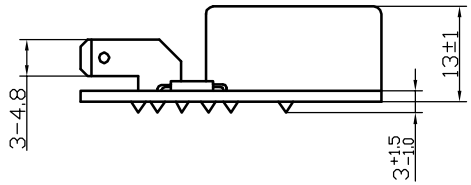

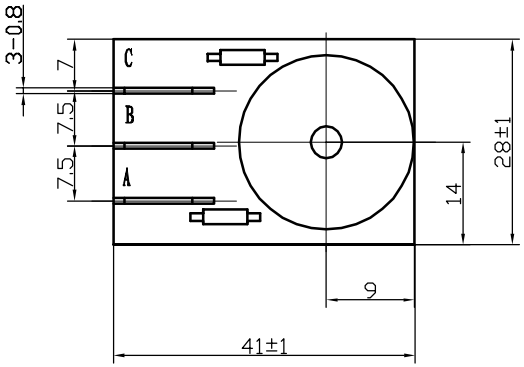

Specifications

1.Rated Voltage.....230AC/DC
2.Operating Voltage.....180~250AC/DC
3.Max. Rated Current.....10mA at 230AC/DC
4.Min. Sound Pressure Level.....75±10dB at 230AC/DC/100cm
5.Resonant Frequency.....3.6±0.5KHz
6.Tone Nature.....Continuous
7.Shell Material/Color.....PC/Black
8.Operating Temperature.....-20~+80℃
9.Store Temperature.....-30~+100℃
10.Weight.....8g

No.	DESCRIPTION	APPROVED	DATE

TOLERANCES UNLESS NOTED OTHERWISE
.X ±
.XX ±
.XXX ±
90° FORMED +2° ANGLES -1°
FIRST ANGLE PROJECTION

APPROVALS	DATE
DRAWN	
CHECKED	
APPROVED	05.08.01

KEPO NINGBO KEPO ELECTRONIC CO.,LTD
http://www.chinaacoustic.com

Piezo transducer
KPI-2410-230

UNIT	DWG NO.		
mm	KP3.840.011		
SCALE NOT TO SCALE	SHEET	VER 1.0	