Specification (Test Condition, 25℃)

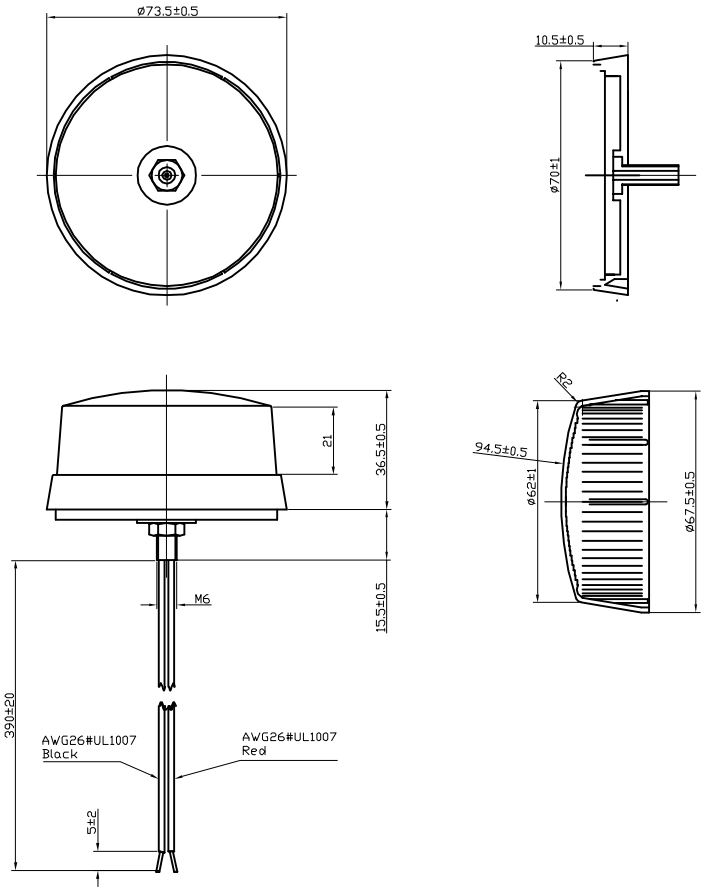

1.Materials/Color ..... Base：ABS/Black
..... Lens：PC/Amber、Blue、Clear、Red
2.Rated Voltage..... 12Vdc
3.Operating Voltage..... 8-15Vdc
4.Max.Rated Current..... 150mA/12Vdc
5.Flash Rate..... 105±20 Per Minute
6.Operating Life ..... 200 Hours Continuous Duty At 12Vdc
7. Operating Temperature Range ..... -20 ~ +65℃
8. Wires Connection ..... Red wire +12Vdc
..... Blank wire GND
9. Weight ..... 85±5 g

No.	DESCRIPTION	APPROVED	DATE

TOLERANCES UNLESS NOTED OTHERWISE
.X ±
.XX ±
.XXX ±
90° FORMED +2° ANGLES -1°
FIRST ANGLE PROJECTION

APPROVALS	DATE
DRAWN	
CHECKED	
APPROVED	04.05.10

KEPO NINGBO KEEP IMPROVING ELECTRONIC CO.,LTD
http://www.chinaacoustic.com

Electronic Strobe MASCON
STL-1A

UNIT	DWG NO.		
mm	OEM1118		
SCALE	SHEET	VER	
NOT TO SCALE		1.0	