MOBICON Electronic Components

YUBRIGHT SINCE 1977

SLIDE POTENTIOMETER

Q-4518

F-2072E

20mm, Stand Type, Dual Unit, Center Detent and Tap available

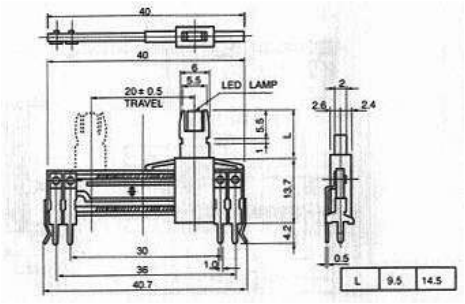

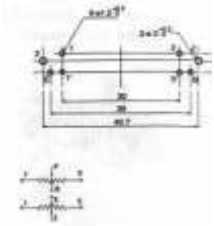

SPECIFICATIONS

Electrical Characteristics

- Total Resistance ..... 500Ω-1 MΩ
- Total Resistance Tolerance..... ±20%
- Resistance Taper..... A, B, C, D, See P109
- Sliding Noise ..... Less than 100 mV at 20 mm/sec.
- Insulation Resistance ..... More than 10 MΩ at DC 250V
- Withstand Voltage ..... 1 minute at AC 250 V
- Residual Resistance..... Term. 1 ~2 : Less than 10 Ω
  Term . 2 ~3 : Less than 10Ω
- Gang Error (Dual Unit)..... -40 dB ~ 0 dB± 3 dB
- Rated Voltage
  Linear Taper B ..... 10 mm, 15mm : AC 100V
  20 mm. 25mm :AC 200V 30 mm: AC 250V
  OtherTapers ..... 10 mm, 15mm : AC 50V
  20 mm, 25mm :AC 150V 30 mm: AC 200V
- Rated Power (Single Unit/Dual Unit)
  Linear Taper B ..... 10 mm, 15mm : 0.05 W / 0.025 W
  20 mm, 25mm :0.1 W/0.05 W
  30 mm:0.2W/0.1 W
  OtherTapers..... 10 mm, 15mm : 0.025 W/0.012 W
  20 mm, 25mm : 0.05 W / 0.025 W
  30 mm :0.1 W / 0.05 W

Mechanical Characteristics

- Operating Force ..... 5 gt.cm - 200 gt.cm
- Center Detent Force ..... 10 gt.cm -400 gt.cm
- Stopper Strength..... 3.0 Kgf/cm Min
  (from the base level to a point of 2 mm)
- Level Wobble..... 2(2xL) /20 mm Max.
  (L: Level length both sides)
- Level Push-Pull Strength..... 3.0 Kgf Min. at 5 sec.

Durability

- Rotational Life..... 10,000 Cycles