HC-49US/SMD (4.0mm)

HC-49US/SMD (3.0mm)

■ 产品特性 Feature

- “AT”Strip Blank Technology
- Cost Effective
- High Stability With Temperature
- Space Saving Design
- Wide Frequency Range
- Excellent Reliability
- Low Profile
- Excellent Aging Characteristics

■ 部品编码指南 Part Number Guide

SZJF	4.000M	9S	18	1	10	L	T&R
	Frequency	Package Type	Load Capacitance	Mode of Oscillation	Frequency Tolerance(25℃)	Available Option	Package Option
		9U:HC-49/U **9T:HC-49/T** **9S:HC-49/S** **OU:HC-50/U**	**SR: Series** **18:18pF**	**1:Fundamental** **3:3rdOvertone** **5:5thOvertone**	**10:± 10ppm** **30:± 30ppm**	**L:Cut Lead** **I: Insulator Tab** **G:Gull Wing** **J:Jacket** **X:Others,Pls Specify**	**B:Bulk** **T&R:Tape & Reel**

■ 技术 Specifications

All Specifications Subject Change Without Notice.

■ 温度频差Frequency Stability Over Temperature Range (AT cut) (Table 1)

■ 等效电阻 Equivalent Series Resistance (ESR) (Table 2)

Freq. Range (MHz)	Mode of Oscillation	ESR(Ω Max)
3.570 - 3.999	AT Fundamental	150
4.000 - 4.999	AT Fundamental	130
5.000 - 5.999	AT Fundamental	120
6.000 - 7.999	AT Fundamental	100
8.000 - 8.999	AT Fundamental	80
10.000 - 14.999	AT Fundamental	60
15.000 - 35.000	AT Fundamental	40
20.000 - 40.000	BT Fundamental	40
25.000 - 90.000	3rd Overtone	70

■ 其它选项 Options Available

Options Available	Item
V	Tape & Reel Packing
V	Centre Third Lead on Top
V	Laser Marking
V	HC-49US SMD with Jacket (Metal Jacket Package)
V	Special Height for HC49US
V	Special C_1 or C_0 Requirement
V	Special ESR

■ 产品标识 Marking specifications

Line 1: JF × × . × × ×

- Frequency in MHz
  5 Digital Max + Decimal
- Company Name

■ 外形尺寸 Dimension(Unit: mm)

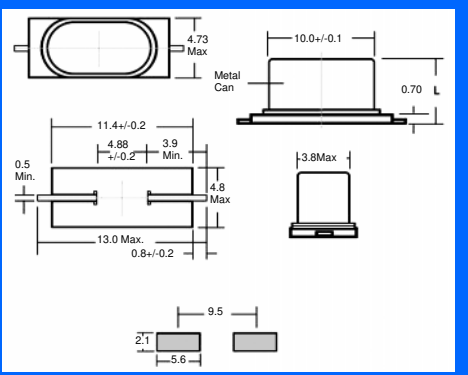
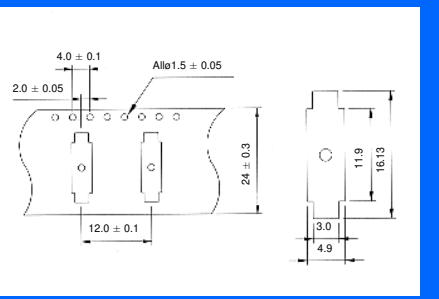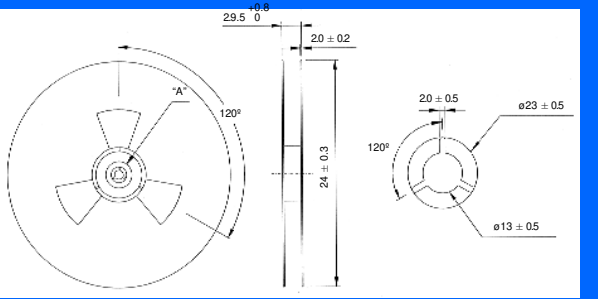
Holder	L
HC-49/US(3.0)	3.2max
HC-49/US(4.0)	4.5max