GP Component

REV.	ECN NO.	LOCATIONS	DESCRIPTION	DATE	DESIGN
A0				2016.05.05	

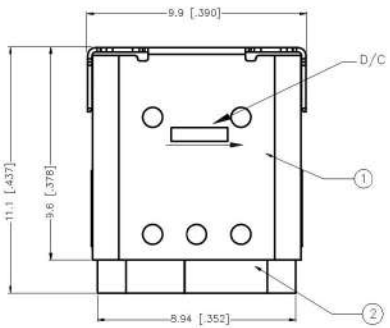

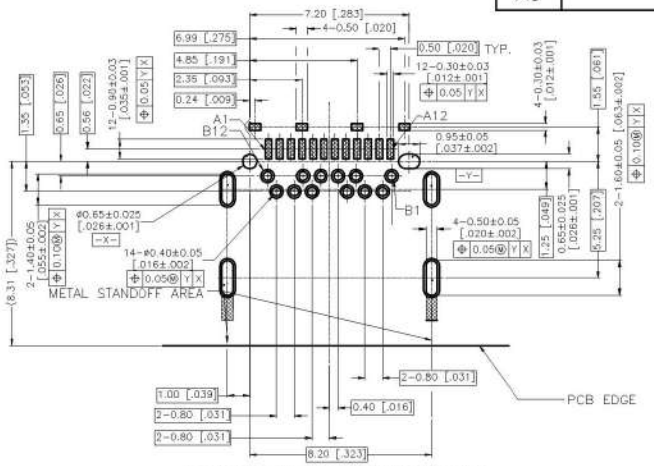

RECOMMENDED P.C.B LAYOUT (COMPONENT SIDE)

PCB THICKNESS: 1.60±0.05[.063±.002]mm

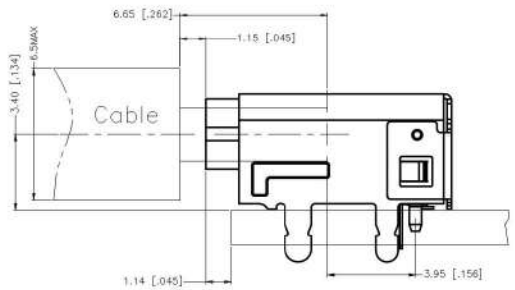

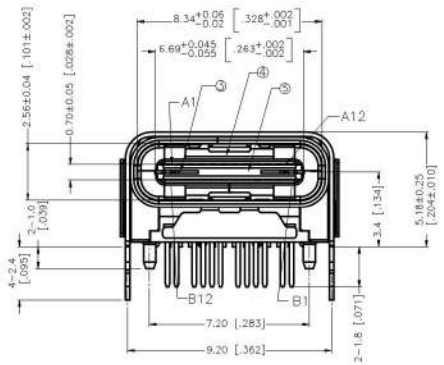

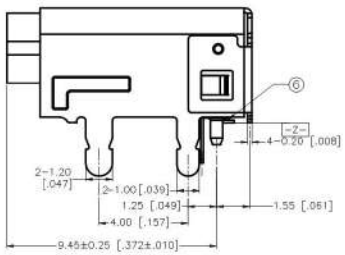

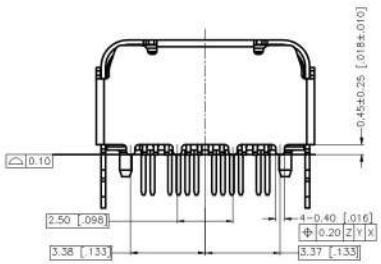

NOTES :

1. ELECTRICAL CHARACTERISTIC:
   - 1-1: CONTACT CURRENT RATING: VBUS AND GND CONTACTS RATED AT 1.25A EA., PARALLELED FOR A TOTAL OF 5A.
   - 1-2: LOW LEVEL CONTACT RESISTANCE: 40 MILLIOHMS MAX. FOR VBUS ,GND AND OTHER CONTACTS. 50 MILLIOHMS MAX. AFTER ENVIRONMENT TEST.
   - 1-3: DIELECTRIC WITHSTANDING VOLTAGE: 100VAC (RMS)MIN.
   - 1-4: INSULATION RESISTANCE: 100 MEGOHMS MIN.
2. MECHANICAL CHARACTERISTIC:
   - 2-1: INSERTION FORCE: 5~20N .
   - 2-2: EXTRACTION FORCE: 8~20 N UP TO 1,000 MATING CYCLES, 6~20 N AFTER 1000 DURABILITY CYCLES.
   - 2-3: DURABILITY: 10000 CYCLES.
   - 2-4: OPERATING TEMPERATURE: -55°C ~ +85°C.
3. MEET USB TYPE C STANDARD SPECIFICATION.
4. DIMENSIONS ARE IN MILLIMETERS, BRACKETED DIMENSIONS ARE INCHES EQUIVALENTS.
5. RECOMMENED PROCESS: IR REFLOW 260°C, 10SECONDS.
6. THE CONNECTOR IS ROHS COMPLIANT.

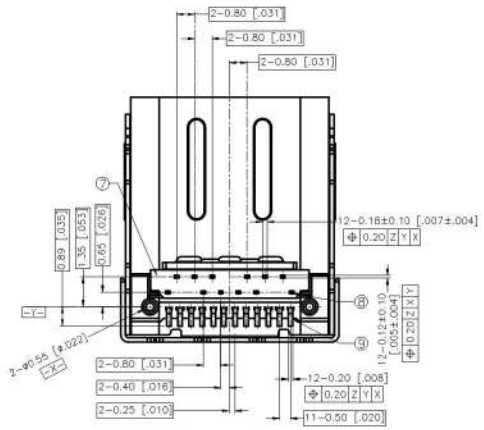

ITEM:USB3.1 TYPE-C 24PF-038

PIN ASSIGNMENT:

Pin No.	Signal Name	Pin No.	Signal Name
A1	GND	B12	GND
A2	SSTXp1	B11	SSRXp1
A3	SSTXn1	B10	SSRXn1
A4	VBUS	B9	VBUS
A5	CC1	B8	SBU2
A6	Dp1	B7	Dn2
A7	Dn1	B6	Dp2
A8	SBU1	B5	CC2
A9	VBUS	B4	VBUS
A10	SSRXn2	B3	SSTXn2
A11	SSRXp2	B2	SSTXp2
A12	GND	B1	GND

NO.	DESCRIPTION	QTY.	MATERIAL	TREATMENT
⑨	UPPER CONTACT	12	C7025R-EH	NICKEL UNDERPLATING OVERALL; PALLADIUM/NICKEL +GOLD FLASH AT CONTACT AREA; LEAD FREE TIN ALLOY PLATED AT TERMINATION.
⑧	LOWER CONTACT	12		
⑦	LOWER IM	1	LCP UL 94V-0	MOLDED COLOR: BLACK.
⑥	UPPER IM	1	LCP UL 94V-0	MOLDED COLOR: BLACK.
⑤	CENTER IM	1	LCP UL 94V-0	MOLDED COLOR: BLACK.
④	EMC	1	SUS304-1/2H	CLEAN
③	SHIELD PLATE	1	SUS304-1/2H	NICKEL PLATING OVER ALL.
②	INNER SHELL	1	SUS304-1/2H	CLEAN
①	OUTER SHELL	1	SUS304-1/2H	NICKEL PLATING ONLY AT TAIL, Au AT TABS AND SOLDER TAIL.

TOLERANCE:
X. ±0.38
X.X ±0.25
X.XX ±0.15
X.XXX ±0.10
X.° ±3° X.X° ±1°

UNIT: mm [inch]

SCALE: 1:1 SIZE: A4

DATE : 2016.05.08	PART NAME:	USB C TYPE RIGHT ANGLE
DATE : 2016.05.08	PART NO.	1.1160-224015
	MOLD NO.	
DATE : 2016.05.08	DRAW NO.	11160-383
	SHEET NO.	01 OF 01