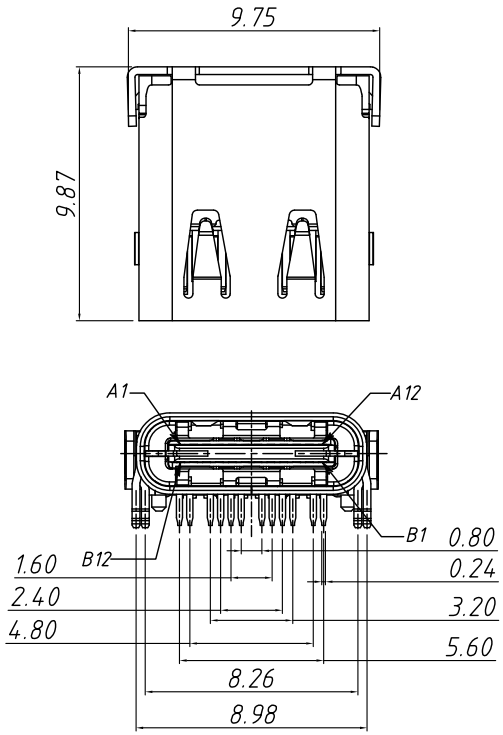

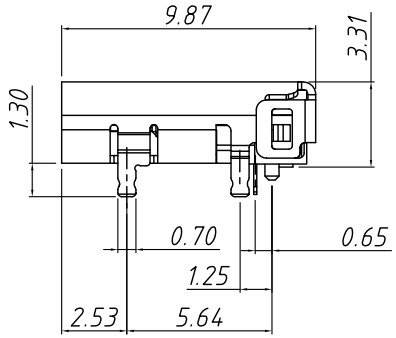

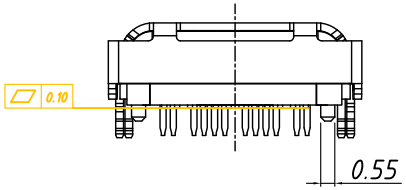

Electrical
Current Rating: 3.0A Max
Voltage: 100 VAC
Contact Resistance: 40mΩ Max
Insulation Resistance: 100MΩ Min.

Mechanical
Operating Temperature:-30°C TO +85°C.
Insertion Force : 5N~20N
Unmating Force: 8N~20N
Durability:10000 Cycles

Order Information

L-KLS1- 5424

- 5424: USB Type C Female Connector
- L: RoHS

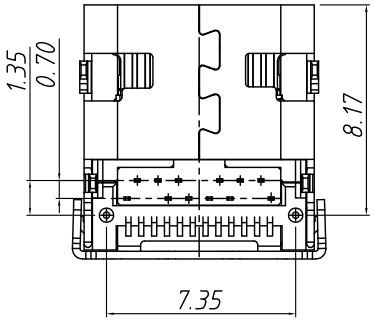

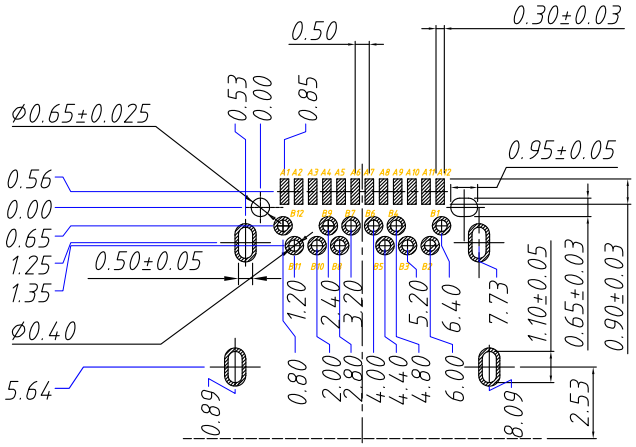

RECOMMENDED PCB LAYOUT
GENERAL TOLERANCE:±0.05

Pin	Signal Name	Pin	Signal Name
A1	GND	B12	GND
A2	SSTXP1	B11	SSRXP1
A3	SSTXN1	B10	SSRXN1
A4	VBUS	B9	VBUS
A5	CC1	B8	SBU2
A6	DP1	B7	DN2
A7	DN1	B6	DP2
A8	SBU1	B5	CC2
A9	VBUS	B4	VBUS
A10	SSRXN2	B3	SSTXN2
A11	SSRXP2	B2	SSTXP2
A12	GND	B1	GND

No.:	Name	DESCRIPTION	Q'TY
5	Shell	Stainless Steel; Ni/Sn plated	1PCS
4	Spring	Stainless Steel;	1PCS
3	Shielding Plate	Stainless Steel; Nickel plated	1PCS
2	Contact	Copper Alloy,Au 15u"/Nickel plated	1SET
1	Housing	High Temperature Plastic,Black	1PCS

TOLERANCE		
.X ±0.30	PROJECTION	
.XX ±0.20	UNITS	mm
.XXX ±0.10	SHEET	A4
X. ±2°	Draw:	Daniel
.X ±1°	Check:	Daniel
.XX ±0.5°	Date	2018-03-01

Description: USB Type C Female CONN. 24P DIP+SMD

KLS P/N: KLS1-5424

NingBo KLS ELECTRONIC CO.,LTD.